Data sheet | Item number: 232-685

Strain relief housing

232-685

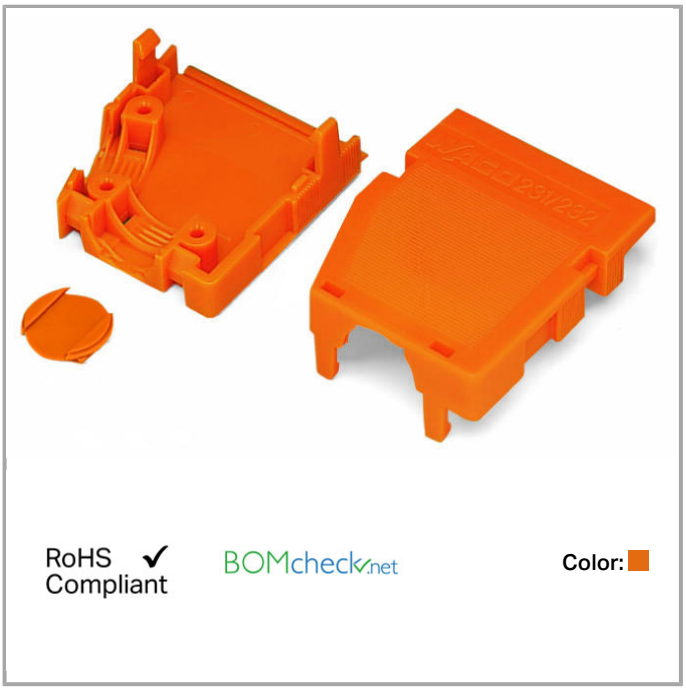

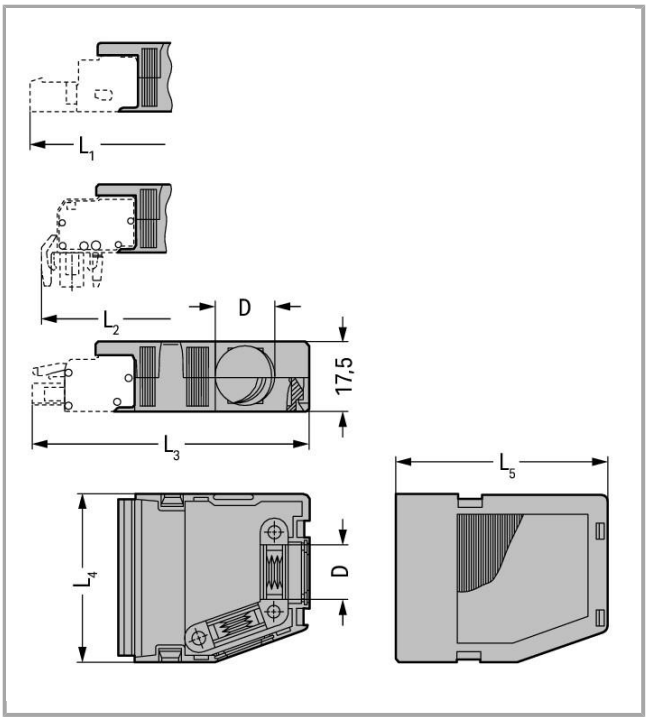

Item description

- Suitable for cable clamp
- 1 x cable outlet (rear side)
- 1 x cable outlets, on side
- 1 Verschlusskappe liegt bei

Data

Connection data

No. of poles	5
Number of connection types	1

Geometrical Data

Pin spacing	7.62 mm / 0.3 inch
Width	54 mm / 2.126 inch
Height	17.5 mm / 0.689 inch
Depth	38 mm / 1.496 inch

Material Data

Color	orange
Fire load	0.286 MJ
Weight	9.515 g

Commercial data

Product Group	3 (Multi Conn. System)
Country of origin	DE
GTIN	4017332229593
Customs Tariff No.	85389099990

Approvals / Certificates

Ship Approvals

Logo	Approval	Additional Approval Text	Certificate name
	ABS American Bureau of Shipping	-	14-HG1241537-PDA

Compatible products

Marking accessories

	Item no.: 2009-115 WMB-Inline; for Smart Printer; on reel; stretchable 5 - 5.2 mm; plain; snap-on type		2009-115
	Item no.: 2009-115/000-002 WMB-Inline; for Smart Printer; on reel; stretchable 5 - 5.2 mm; plain; snap-on type	/000-002	2009-115
	Item no.: 2009-115/000-006 WMB-Inline; for smartPRINTER; on reel; stretchable 5 - 5.2 mm; plain; snap-on type	/000-006	2009-115
	Item no.: 2009-115/000-007 WMB-Inline; for Smart Printer; on reel; stretchable 5 - 5.2 mm; plain; snap-on type	/000-007	2009-115
	Item no.: 2009-115/000-012 WMB-Inline; for smartPRINTER; on reel; stretchable 5 - 5.2 mm; plain; snap-on type	/000-012	2009-115
	Item no.: 2009-115/000-017 WMB-Inline; for Smart Printer; on reel; stretchable 5 - 5.2 mm; plain; snap-on type	/000-017	2009-115

	Item no.: 2009-115/000-023 WMB-Inline; for Smart Printer; on reel; stretchable 5 - 5.2 mm; plain; snap-on type	/000-023	2009-115
	Item no.: 2009-115/000-024 WMB-Inline; for smartPRINTER; on reel; stretchable 5 - 5.2 mm; plain; snap-on type	/000-024	2009-115
	Item no.: 793-501 WMB marking card; as card; not stretchable; plain; snap-on type		793-501
	Item no.: 793-501/000-002 WMB marking card; as card; not stretchable; plain; snap-on type	/000-002	793-501
	Item no.: 793-501/000-005 WMB marking card; as card; not stretchable; plain; snap-on type	/000-005	793-501
	Item no.: 793-501/000-006 WMB marking card; as card; not stretchable; plain; snap-on type	/000-006	793-501
	Item no.: 793-501/000-007 WMB marking card; as card; not stretchable; plain; snap-on type	/000-007	793-501
	Item no.: 793-501/000-012 WMB marking card; as card; not stretchable; plain; snap-on type	/000-012	793-501
	Item no.: 793-501/000-017 WMB marking card; as card; not stretchable; plain; snap-on type	/000-017	793-501
	Item no.: 793-501/000-023 WMB marking card; as card; not stretchable; plain; snap-on type	/000-023	793-501
	Item no.: 793-501/000-024 WMB marking card; as card; not stretchable; plain; snap-on type	/000-024	793-501
	Item no.: 793-5501 WMB marking card; as card; for terminal block width 5 - 17.5 mm; stretchable 5 - 5.2 mm; plain; snap-on type		793-5501
	Item no.: 793-5501/000-002 WMB marking card; as card; for terminal block width 5 - 17.5 mm; stretchable 5 - 5.2 mm; plain; snap-on type	/000-002	793-5501
	Item no.: 793-5501/000-005 WMB marking card; as card; stretchable 5 - 5.2 mm; plain; snap-on type	/000-005	793-5501
	Item no.: 793-5501/000-006 WMB marking card; as card; stretchable 5 - 5.2 mm; plain; snap-on type	/000-006	793-5501

	Item no.: 793-5501/000-007 WMB marking card; as card; stretchable 5 - 5.2 mm; plain; snap-on type	/000-007	793-5501
	Item no.: 793-5501/000-012 WMB marking card; as card; stretchable 5 - 5.2 mm; plain; snap-on type	/000-012	793-5501
	Item no.: 793-5501/000-014 WMB marking card; as card; stretchable 5 - 5.2 mm; plain; snap-on type	/000-014	793-5501
	Item no.: 793-5501/000-017 WMB marking card; as card; stretchable 5 - 5.2 mm; plain; snap-on type	/000-017	793-5501
	Item no.: 793-5501/000-023 WMB marking card; as card; stretchable 5 - 5.2 mm; plain; snap-on type	/000-023	793-5501
	Item no.: 793-5501/000-024 WMB marking card; as card; stretchable 5 - 5.2 mm; plain; snap-on type	/000-024	793-5501

General accessories

	Item no.: 209-173 Fixing screw; for cable clamp; 7 or more poles	209-173
	Item no.: 209-174 Cable clamp; for strain relief; 7 or more poles	209-174

Subject to changes.